Confidential

EPSON

Micro Dot Printer

M-150II

Designer's Guide

STANDARD	
Rev. No.	B
Notes	

Copied Date	, ,
Copied by	

SEIKO EPSON CORPORATION

MATSUMOTO MINAMI PLANT
2070 KOTOBUKI KOAKA, MATSUMOTO-SHI, NAGANO, 399-8702 JAPAN
PHONE(0263)86-5353 FAX(0263)86-9923

Confidential

REVISION SHEET

The table below indicates which pages in this specification have been revised.
Before reading this specification, be sure you have the correct version of each page.

Revisions		Design Section			Sheet Rev. No.					
Rev.	Document	WRT	CHK	APL	Sheet	Rev.	Sheet	Rev.	Sheet	Rev.
--	Enactment	Aoki	Koyano	Koike	I	A				
A	Change	Aoki	Narita	Arai	II	A				
B	Change									
					1	A				
					2	A				
					3	A				
					4	B				

TITLE	Front Part					Contents	Appendix	Total
	Cover	Rev. Sheet	Scope	General Descriptions	Table of Contents			
M-150II Designer's Guide (STANDARD)	1	2	--	1	1	4	--	9

Confidential

REVISION SHEET

REV.	SHEET	CHANGED CONTENTS
A	All	All pages are re-formatted due to add the “Confidential” in the header.
	1	1. SHAPING ON TIMING DETECTOR OUTPUT CIRCUIT “with 0 ± 0.1 V”, was “with 0 ± 1 V”
	2	3. MOTOR DRIVE SIGNAL AND MOTOR BRAKING CIRCUIT Sample circuit is added.
B	4	3) Paper feed load must not exceed 30 g → ..... 0.29 N {30 gf}.

TITLE

M-150II

Designer’s Guide

(STANDARD)

Confidential

CONFIDENTIALITY AGREEMENT

BY USING THIS DOCUMENT, YOU AGREE TO ABIDE BY THE TERMS OF THIS AGREEMENT. **PLEASE RETURN THIS DOCUMENT IMMEDIATELY IF YOU DO NOT AGREE TO THESE TERMS.**

1. This document contains confidential, proprietary information of Seiko Epson Corporation or its affiliates. You must keep such information confidential. If the user is a business entity or organization, you must limit disclosure to those of your employees, agents and contractors who have a need to know and who are also bound by obligations of confidentiality.
2. On the earlier of (a) termination of your relationship with Seiko Epson, or (b) Seiko Epson's request, you must stop using the confidential information. You must then return or destroy the information, as directed by Seiko Epson.
3. If a court, arbitrator, government agency or the like orders you to disclose any confidential information, you must immediately notify Seiko Epson. You agree to give Seiko Epson reasonable cooperation and assistance in the negotiation.
4. You may use confidential information only for the purpose of operating or servicing the products to which the document relates, unless you obtain the prior written consent of Seiko Epson for some other use.
5. Seiko Epson warrants that it has the right to disclose the confidential information. SEIKO EPSON MAKES NO OTHER WARRANTIES CONCERNING THE CONFIDENTIAL INFORMATION OR ANY OTHER INFORMATION ON THE DOCUMENT, INCLUDING (WITHOUT LIMITATION) ANY WARRANTY OF TITLE OR NON-INFRINGEMENT. Seiko Epson has no liability for loss or damage arising from or relating to your use of or reliance on the information in the document.
6. You may not reproduce, store or transmit the confidential information in any form or by any means (electronic, mechanical, photocopying, recording, or otherwise) without the prior written permission of Seiko Epson.
7. Your obligations under this Agreement are in addition to any other legal obligations. Seiko Epson does not waive any right under this Agreement by failing to exercise it. The laws of Japan apply to this Agreement.

CAUTIONS

1. This document shall apply only to the product(s) identified herein.
2. The examples, such as circuits movements or control methods for products described in this document are for the purpose of designing a model only, and Seiko Epson Corporation shall not provide any sort of warranty that the contents of the document do not infringe on any intellectual property right of a third party.
3. No part of this document may be reproduced, stored in a retrieval system, or transmitted in any form or by any means, electronic, mechanical, photocopying, recording, or otherwise, without the prior written permission of Seiko Epson Corporation.
4. The contents of this document are subject to change without notice. Please contact us for the latest information.
5. While every precaution has been taken in the preparation of this document, Seiko Epson Corporation assumes no responsibility for errors or omissions.
6. Neither is any liability assumed for damages resulting from the use of the information contained herein.
7. Neither Seiko Epson Corporation nor its affiliates shall be liable to the purchaser of this product or third parties for damages, losses, costs, or expenses incurred by the purchases or third parties as a result of: accident, misuse, or abuse of this product or unauthorized modifications, repairs, or alterations to this product, or (excluding the U. S.) failure to strictly comply with Seiko Epson Corporation's operating and maintenance instructions.
8. Seiko Epson Corporation shall not be liable against any damages or problems arising from the use of any options or any consumable products other than those designated as Original EPSON Products or EPSON Approved Products by Seiko Epson Corporation.

TRADEMARKS

EPSON® is a registered trademark of Seiko Epson Corporation.

General Notice: Other product and company names used herein are for identification purposes only and may be trademarks of their respective companies.

Confidential

Table of Contents

1. SHAPING ON TIMING DETECTOR OUTPUT SIGNAL 1
2. DRIVER CIRCUIT 1
3. MOTOR DRIVE SIGNAL AND MOTOR BRAKING CIRCUIT 2
4. CONNECTION OF PRINTER TO EXTERNAL CIRCUITS 2
5. RIBBON CASSETTE 3
6. PAPER GUIDING PART OF CUSTOMER CASING AND PAPER ROLL HOLDER UNIT 4
7. DESIGN OF PAPER CUTTER 4
8. PREVENTING THE OUTGOING PAPER FROM REENTERING THE PRINTER 4
9. INSTALLATION OF PRINTER 4
10. PREVENTION OF ESTERNAL EFFECT ON THE PRINTER 4

1. SHAPING ON TIMING DETECTOR OUTPUT SIGNAL

Timing pulses are obtained with 0 ± 0.1 V or timing detector output signal being used as threshold.

Example (1) of shaping circuit

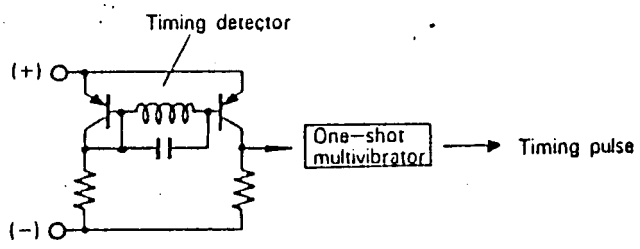

The pulses enclosed in ☐ are to be provided by the customer.

2. DRIVER CIRCUIT

Low-saturation transistor should be used for Coil-driver.

Exapmle of circuit (1)

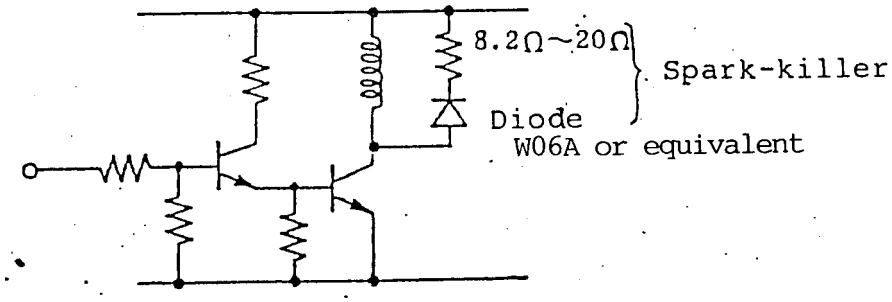

Example of circuit (2)

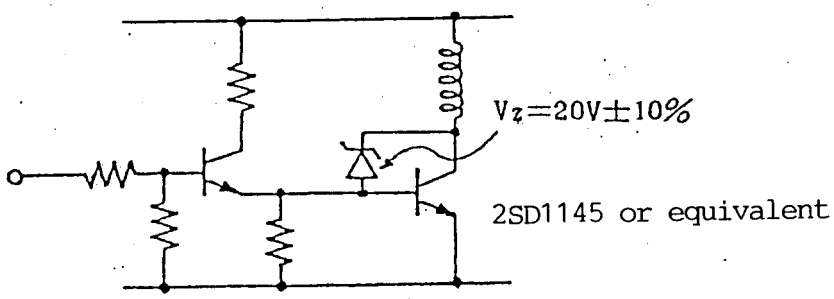

3. MOTOR DRIVE SIGNAL AND MOTOR BRAKING CIRCUIT

1) Phase

The leading edge of motor braking signal must appear within 0.5 ms from the trailing edge of motor driver signal.

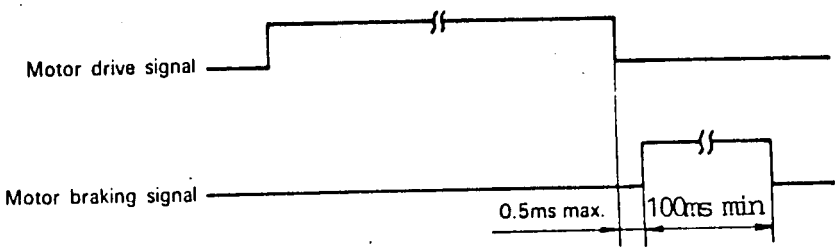

2) Motor Braking signal

The width of motor braking pulse must not be smaller than 100 ms. This pulse may be made to last till application of a new motor drive pulse if minimization of power consumption in the motor braking is not a problem of major interest.

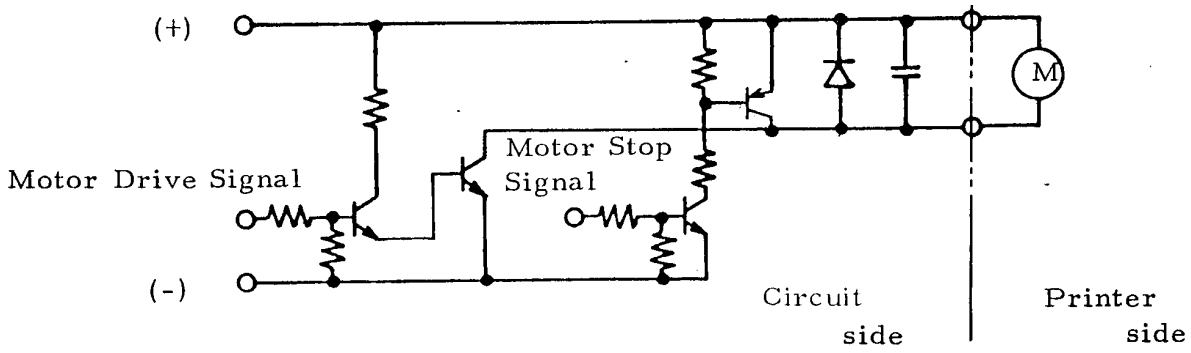

4. CONNECTION OF PRINTER TO EXTERNAL CIRCUITS

Copper foil patterns of 2.54 mm pitch are provided on the circuit board fixed to the frame of the printer. For connection of the printer to external circuits, solder cable or lead wires to these copper foil patterns. For the flexible printed cable or lead wires, pay attention to the current capacity of each of the conductors print solenoid common, solenoid A, B, C and D. Further, be sure that the solders be not directly subjected to tension.

For dimensional details, refer to the connector terminal assignment and principal dimensions of the printer given in the Specifications.

5. RIBBON CASSETTE

1) It is desirable to remove the paper roll before placing the ribbon cassette in the printer.
2) Before placing the ribbon cassette, turn the button provided on one end of the cassette in the direction of the arrow (Fig. 2.1) so that the ribbon becomes tense. Then, position the cassette so that the ribbon passes through the notches formed in the right and left frames of the printer (Fig. 2.2) and lightly press down the cassette into the set position. During this operation, do not press the button, for that will make it impossible to set the cassette into position because of interference of the button and the spool gear shaft (rising from the printer toward the center of the cassette button) with each other.
   If the ribbon has turned up during the operation of placing the cassette in the printer, it can be restored into proper condition by further turning the button after the cassette has been set into position (Fig. 2.3)

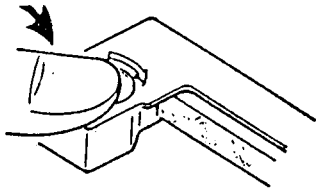

Fig. 2.1

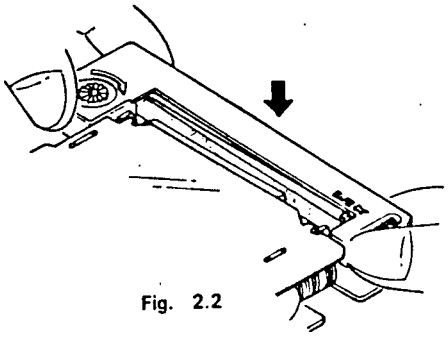

Fig. 2.2

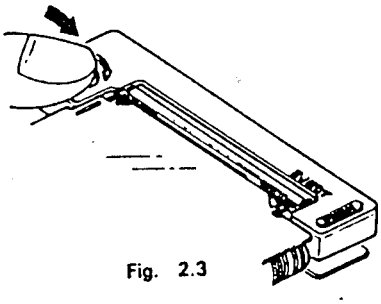

Fig. 2.3

3) To remove the ribbon cassette, push it down with your finger at the end where the word PUSH is found. In consequence of this, the other end will go up.
   Turn and remove the cassette by using the end marked with PUSH as the center of rotation (Fig. 2.4). This operation requires some volume of free space around the PUSH end of the cassette, so keep this requirement in mind when designing the customer casing.
   (For dimensional details, refer to principal dimensions of the printer given in the Specifications.)

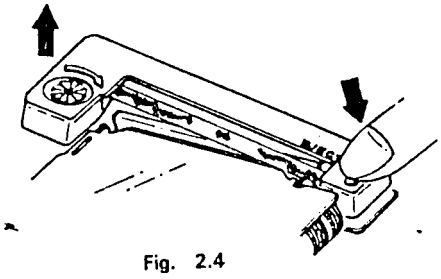

Fig. 2.4

NOTE: Be sure to always use the specified cassette (ERC-05) to maintain high quality of print.

6. PAPER GUIDING PART OF CUSTOMER CASING AND PAPER ROLL HOLDER UNIT

1) The paper guiding part of the customer casing and the paper roll holder unit must be so designed that the center of the holder unit aligns with the longitudinal axis of the printer's paper inlet and that a paper of 44.5 ± 0.5 mm can be guided smoothly.
2) The total play between the paper roll holder unit and the paper roll must not exceed 2 mm and the holder unit must not press against the paper roll.
3) Paper feed load must not exceed 0.29 N {30 gf}.

For dimensional details, refer to principal dimensions of the printer given in the Specifications.

7. DESIGN OF PAPER CUTTER

In designing the paper cutter, pay attention to the following points:

1) The nearer to vertical is the position of the paper in the vicinity of the paper outlet (around the place where is to be provided the paper cutter), the greater will be the noise of printing because of resonance.
2) Paper feeding load increases as the position of the paper nears to horizontal, and consequently the risk of occurrence of occurrence of trouble in paper feeding increases.

8. PREVENTING THE OUTGOING PAPER FROM REENTERING THE PRINTER

The customer casing must be so designed that the paper outgoing from the printer will not reenter the printer.

9. INSTALLATION OF PRINTER

To determine the printer's position as considered in plan, use as reference the four mounting feet which are part of the printer frame. As to holding the printer at desired level, special consideration is required in designing the customer casing.
In such case as the customer casing should hold the printer with the cover being interposed between them, be sure that the casing bear not on the printer through the central part of the cover, but that the casing bear on the printer frame (around the two oval holes in the cover where part of the printer frame is exposed).
Since the bottom of the reciprocating print head is hardly inward with respect to the bottom of the printer frame, support of the printer frame bottom by the customer casing must be so designed that no part of the casing will come into contact with the print head bottom in any case.

10. PREVENTION OF ESTERNAL EFFECT ON THE PRINTER

As a reed switch is used for reset detector, do not put the magnetic material that has a bad effect on the reed switch within the range of 7 mm from the top of the cover.